Saab 9-2x – Headlight Wiring Mods

The information below documents the procedure I used to modify the operation of the DRLs, Parking Lights, and Fog Lights on my Saab 9-2x.

Disclaimer: This information is provided as a reference and the author assumes no responsibility for any damage that may result from this modification to your car. It is also recommended that you disconnect the negative terminal cable from the battery before performing working on the electrical system.

The following modifications were made to the way the lighting system operates:

1. DRLs come on only when light combination switch is OFF.
2. DRLs turn off when light combination switch is set to first position (Parking).
    a. DRLs were previously ON.
3. Fog Lamps are enabled when combination switch is set to first position (Parking).
    a. Fog Lamps were previously enabled when combination switch is set to second position (Headlights).

Here are pictures of how the lamps operate:

All lamps OFF – Note Hella Micro DE Fog Lights are installed (see separate writeup).

DRLs ON

Parking Lamps ON (DRLs turn OFF)

Fog Lamps ON with Parking Lamps

Fog Lamps ON with Headlamps

1. **Fog Lamp Enabled with Parking Lamps**

   a. I removed the lower dash panel to get access to the Relay Block and wiring harness.

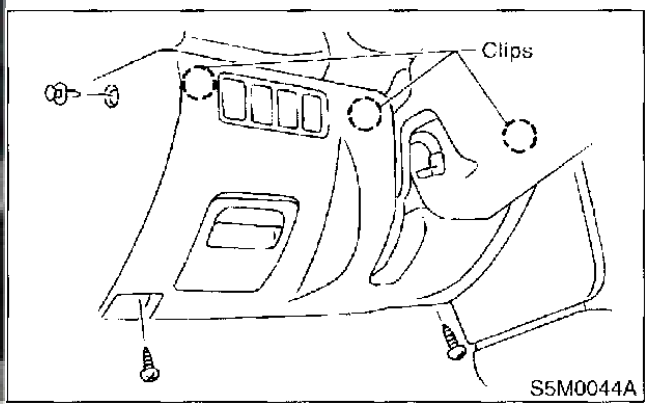

Note: Remove 3 screws. The panel is clipped along the top in 3 places (2 on the left of the steering column, one on the right). Pull lightly upward and out to avoid breaking the clips.

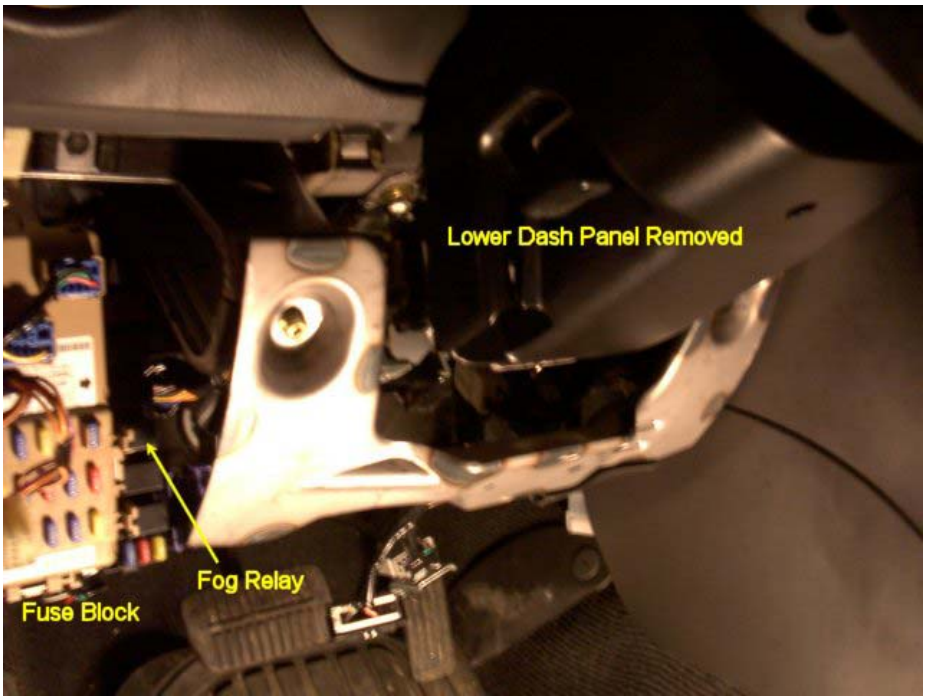

Note: I removed the metal bracket under the steering column to get easier access. It removes easily by unscrewing the 2 screws at the top on both sides.

b. The Fuse Block must be unclipped as does the relay block in order to gain access to the Fog Relay wiring that will be modified.

Note: The Fuse Block is attached at the top with a hex nut and on both sides with clips. The Relay Block is clipped to the metal frame with 3 clips that must be compressed to release the block.

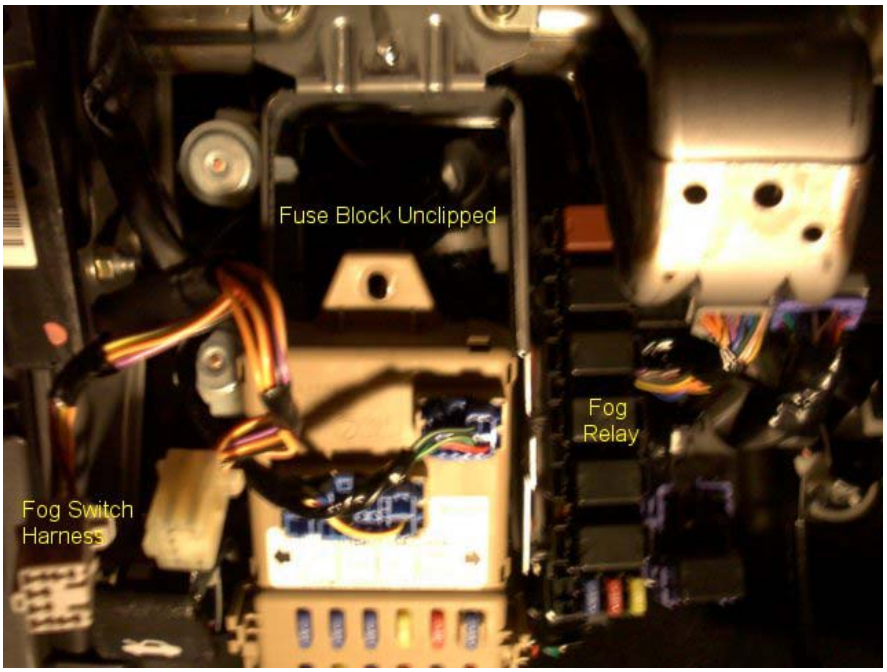

c. Once everything's unclipped, the following wiring changes must be done:

1. The Red/Green Stripe wire at the Fog Switch Harness must be cut about 1-2" from connector. Tape the end not connected to the connector (not needed).
2. The Red/Green Stripe wire at the Fog Relay must be cut about 1" from Relay Block. Tape the end not connected to the Relay Block (not needed).
3. Connect a new wire (A) to the Red/Green Stripe wire coming out of the Relay Block and run it to the Fog Switch Harness.
4. Tap another wire (B) into the Violet wire on the Fog Switch Harness. The Violet wire provides +12V when the Parking Lights are on.
5. Connect wires (A) (From Relay), (B) (From Violet) and Red/Green Stripe Wire coming from Fog Switch Connector.

Done. The Fog Lights will now be enabled when the Parking Lights are on.

A: SCHEMATIC

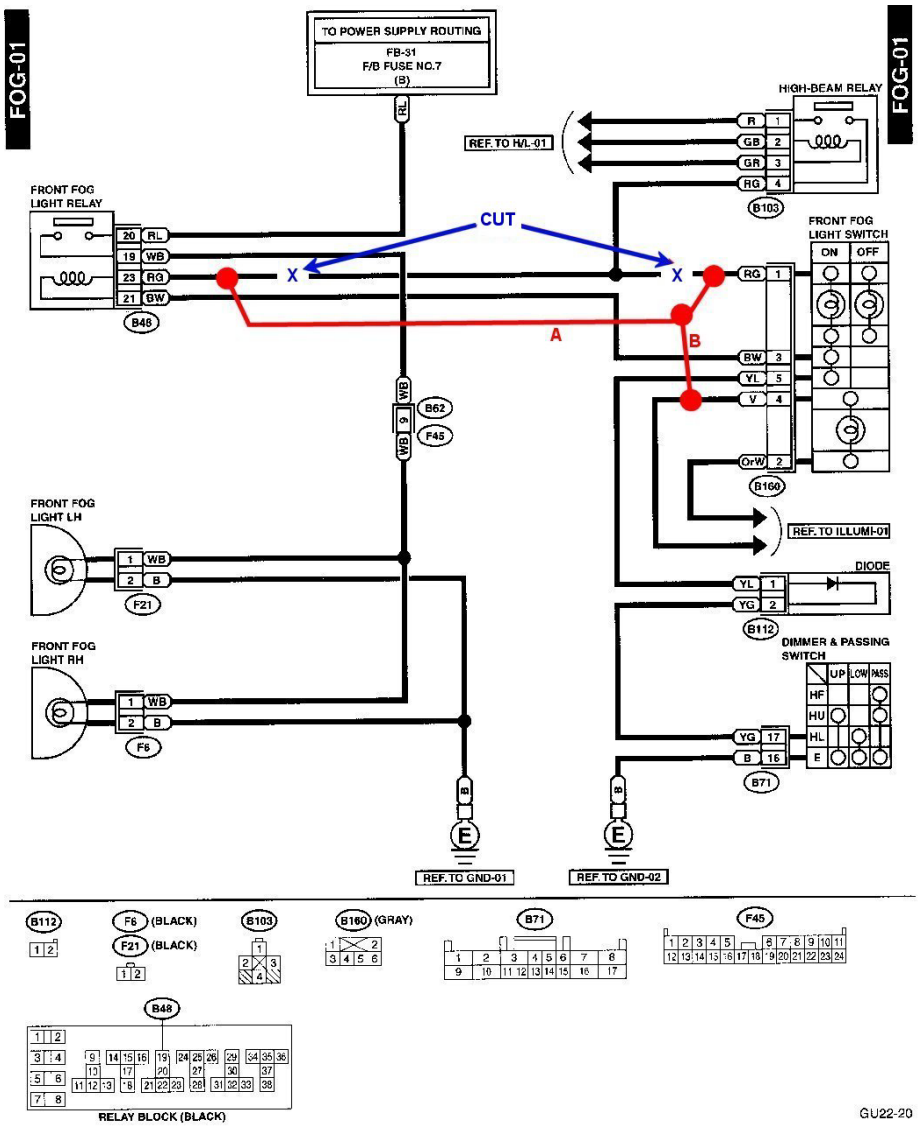

2. **DRLs OFF when Parking Lights ON.**

a. First, the lower passenger dash/glovebox must be removed.

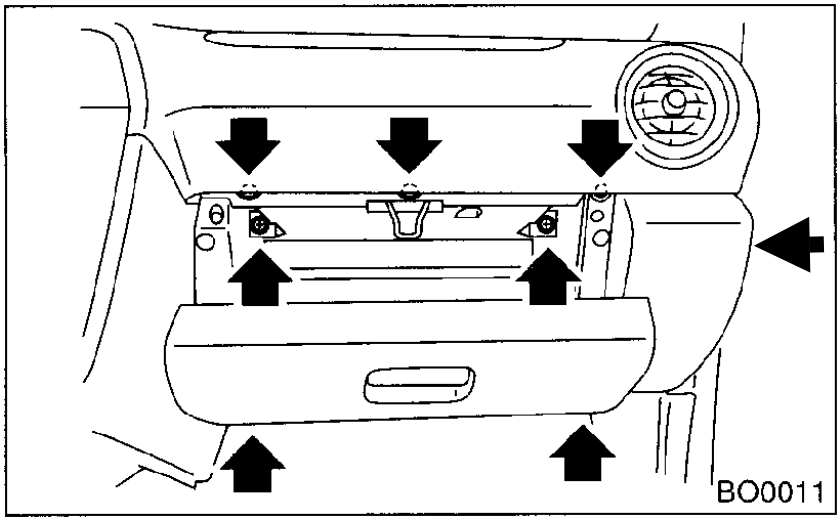

b. Locate the DRL Module wiring harness.

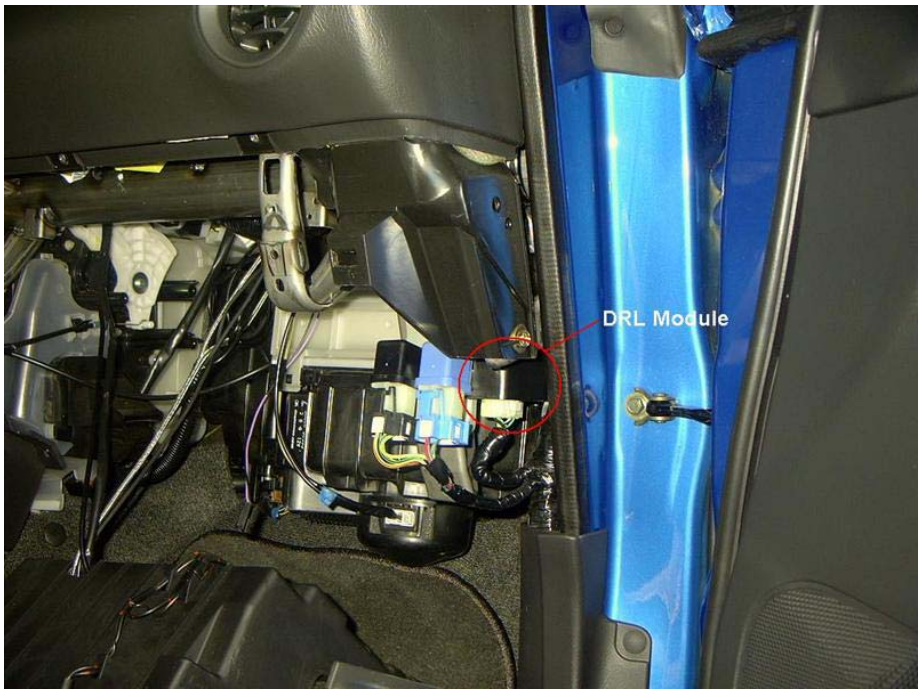

The DRL module uses 2 inhibit pins:

- Pin 6 – Parking Brake (Turns DRL OFF when Parking Brake is engaged).
- Pin 8 – Auto Transmission (Turns DRL OFF when AT is in Park – not used in Manual Transmission.

The DRLs are inhibited when one of these pins is grounded.

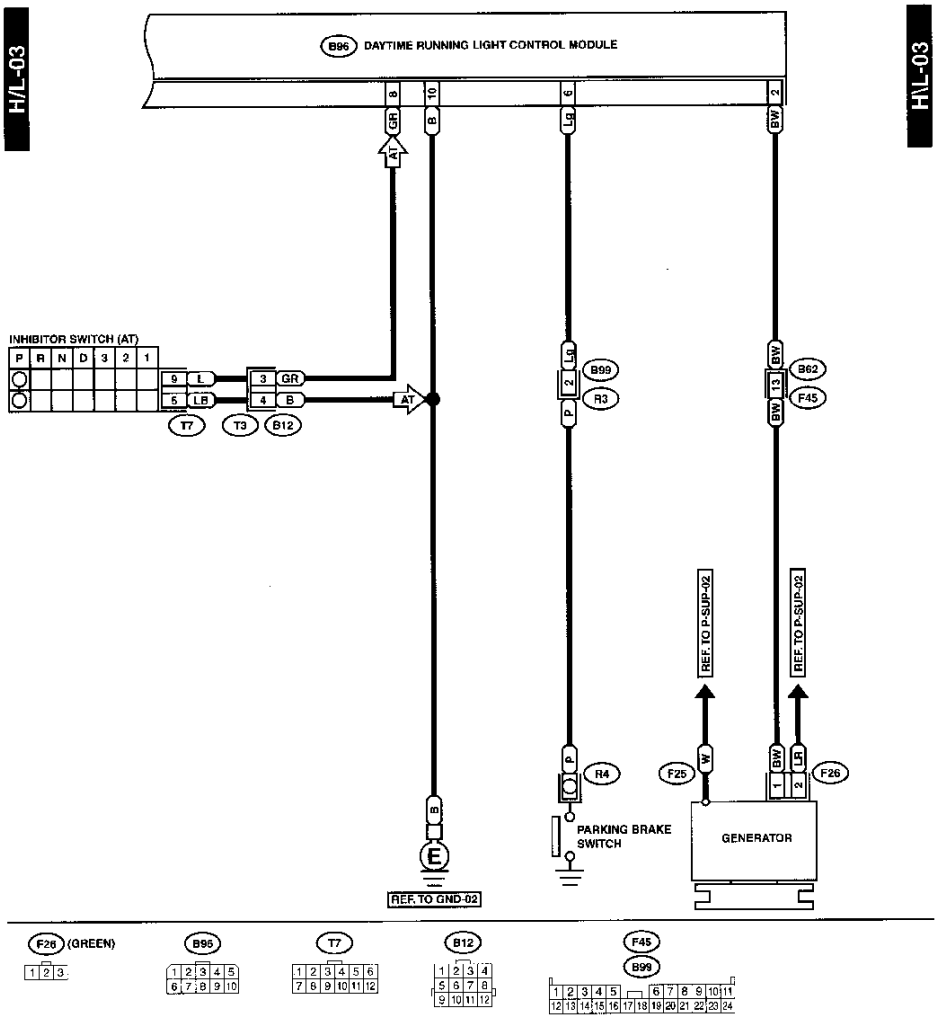

On a Manual Transmission car, you can use Pin 8 for this mod since it is not used for any other purpose. However on an Automatic Transmission car, both pins are used but redundant. Pin 8 is more reliable as a DRL inhibit when the car is started or not in motion since it is grounded when the transmission is in Park, so that should be left alone. However Pin 6 is not required so it will be used for the mod on the Automatics. The following instructions are for an Automatic, but Manual owners can do the same by performing the mod on Pin 8 although they will need to add a connector wire on the harness since it is not there.

The following reference provides additional info, however the method of grounding the inhibit pin is different: http://www.scoobymods.com/forums/showthread.php?t=2353

Theory:

- In normal operation, DRLs come on when Automatic transmission not in Park. When Parking Lights are turned on, it is desired to have DRLs turn OFF.
- By using the Pin 6 Inhibit function and connecting that pin to a Parking Light switched ground, the DRL will turn OFF.
- Pin 6 cannot be used any longer for the Parking Brake inhibit since grounding that pin will also ground the rest of the Parking Brake indicator circuit, i.e. the

Brake Light on the instrument cluster will illuminate. Therefore Pin 6 will be used exclusively for this mod.

- I had originally planned to use a Parking Lamp switched ground wire on the ECU block, but decided not to mess with that sensitive harness so I used a relay instead as shown below.

The relay uses the Glove Box light wiring (handily near the DRL wiring harness). This light comes on when the Parking Lights are turned on and is not affected by the dash dimming circuit. When the Parking Lights are turned on, the relay circuit is closed (ON) which connects the DRL Pin 6 to Ground and turns the DRLs OFF. So basically, perform the following:

1. Cut the Light Green wire associated with Pin 6 about 1-2" from the end of the connector. Tape the end not connected to the connector.
2. Connect a new wire between the Light Green wire coming out of the connector to the switched pole of a normally open relay.
3. Connect the relay's other switched pole and one of it's energizing poles together and tap onto the Black ground wire of the glovebox light circuit.
4. Connect the relay's other energizing pole to a tap onto the Violet wire of the glovebox light circuit.

Done. When the Parking Lights are turned on, the DRLs will go off.

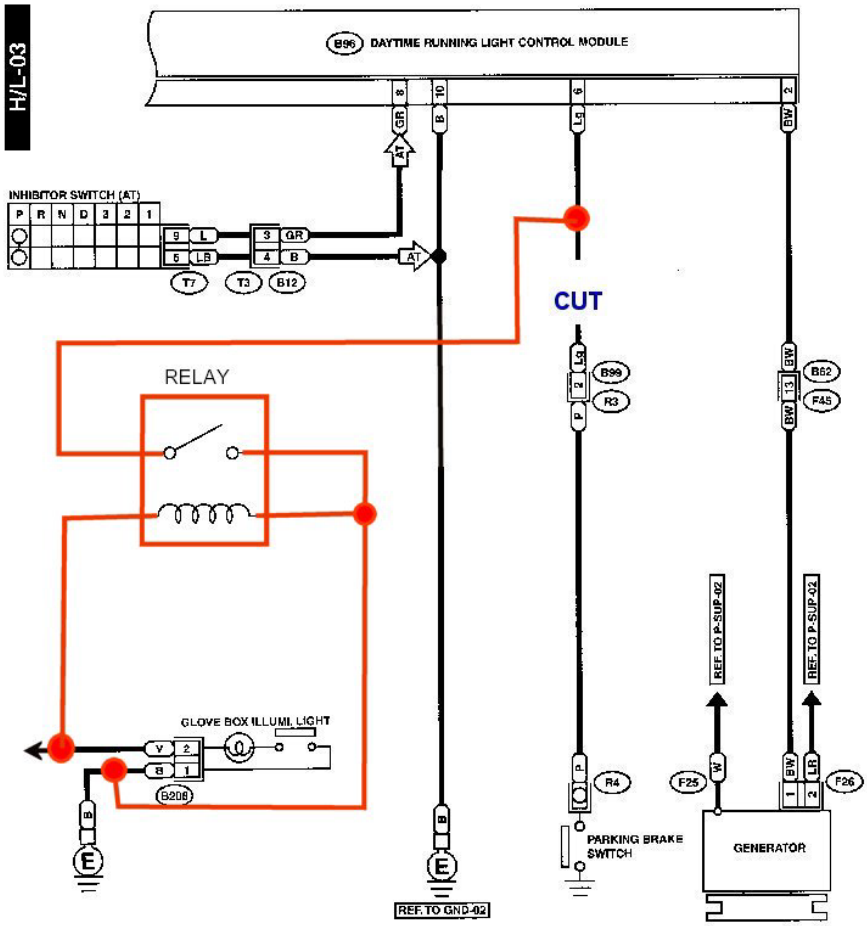

3. **Bonus – One Touch Unlock.**

This is not a light mod, but while I was under the dash this was a simple mod to perform. It allows you to unlock all doors with one touch of the remote, rather than hitting it once for the driver's door and a second time for the rest.

I basically performed the mod described here:

http://www.scoobymods.com/forums/showthread.php?t=3077

The wires to be modified are connected to the Integrated Module just to the right of the Relay Block and Fuse Block noted in the previous mods. The module has 2 connectors. The wires to be modified are on the purple connector on the right.

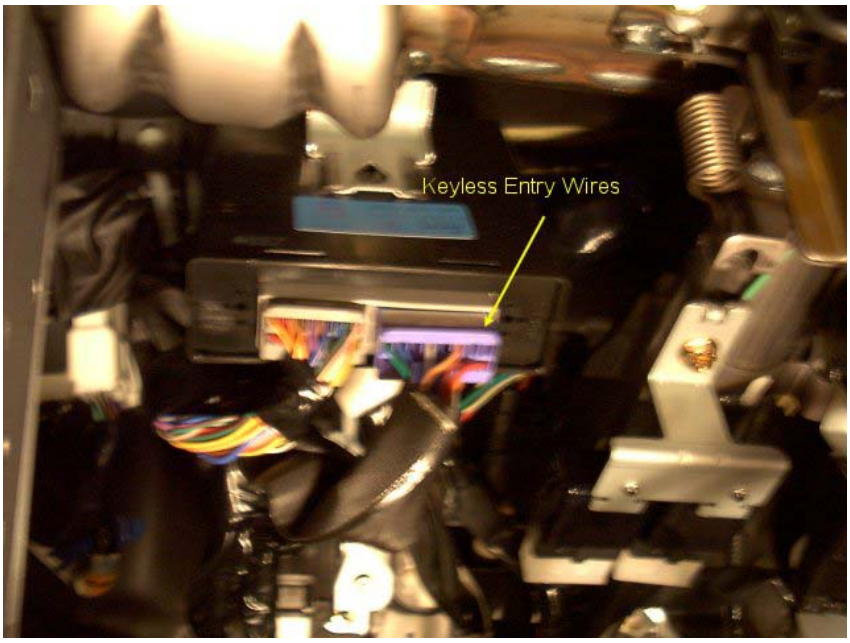

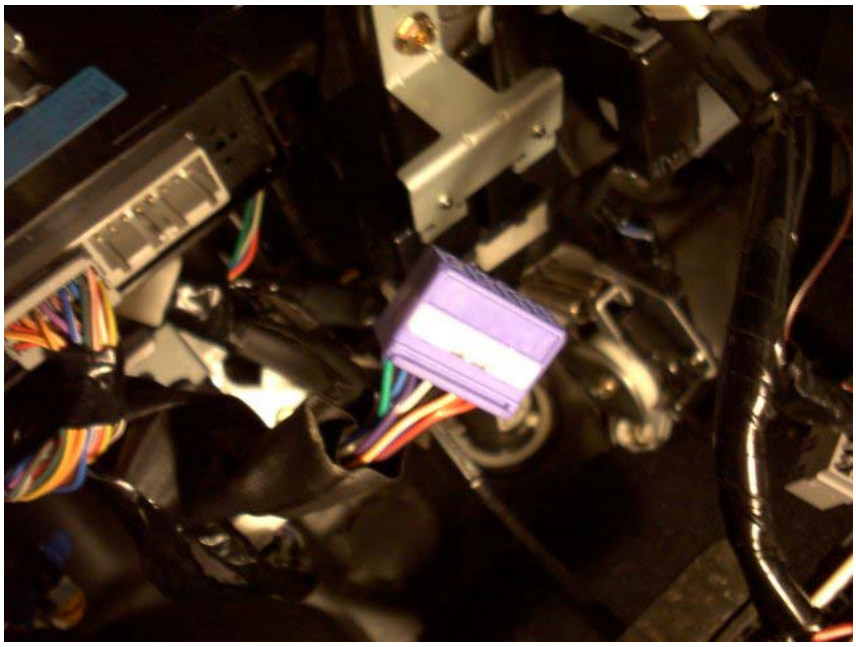

Perform the following:

1. Cut the Red/Green Strip Wire on Pin 7 of the purple connector about 1” away from the connector.
2. Tape off the wire going to the connector. Although it will no longer be used, it will still be live with 12V when the unlock button is hit twice.
3. Connect the other end of the Reg/Green Stripe wire to a tap on the Red Wire on Pin 8 of the connector.

Done. When the unlock button on the remote is hit the first time, all doors will unlock.